DocuSign Envelope ID: BEA82789-CCD9-4CBA-8A50-BCA61C298DA3

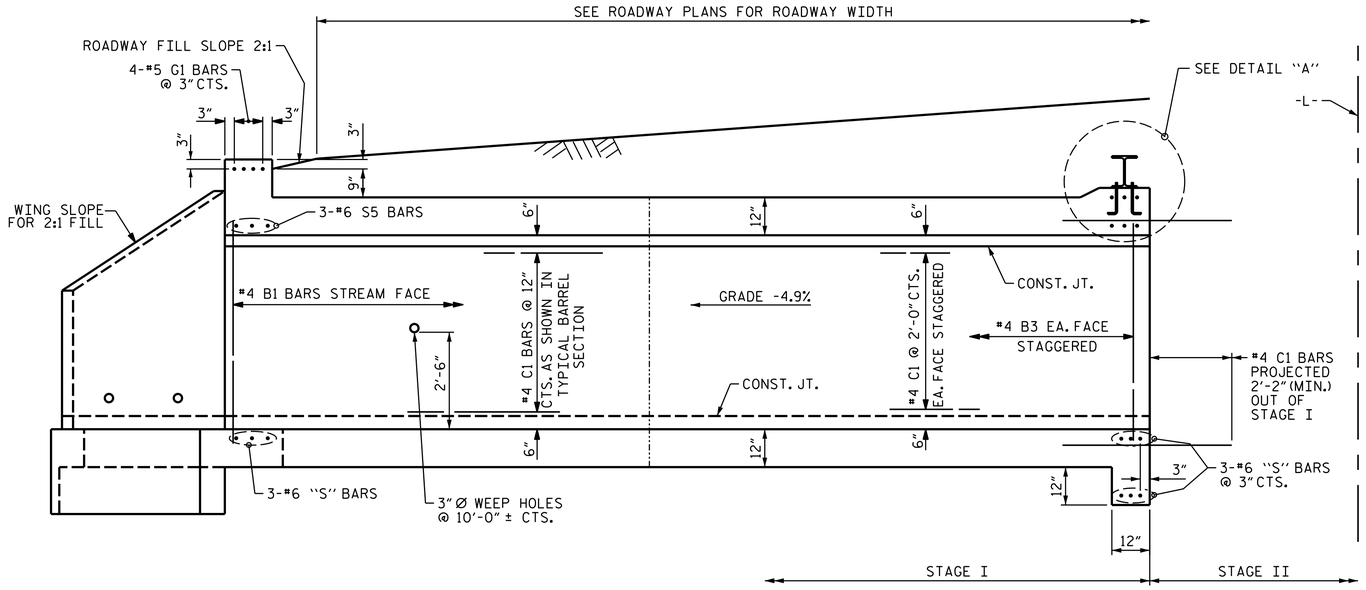

EXTERIOR WALL INTERIOR WALL

CULVERT SECTION NORMAL TO ROADWAY

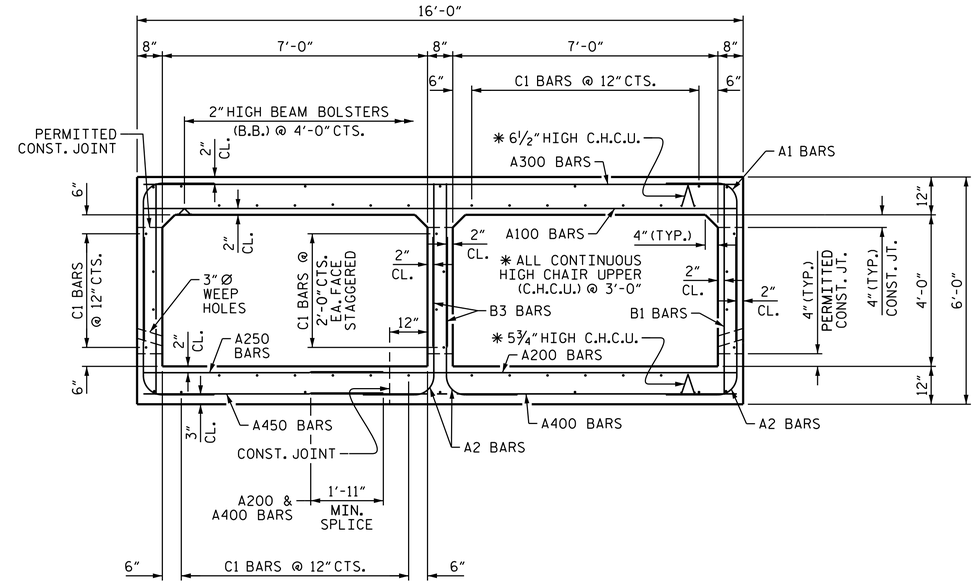

RIGHT ANGLE SECTION OF BARREL

THERE ARE 50 "C" BARS IN SECTION OF BARREL.

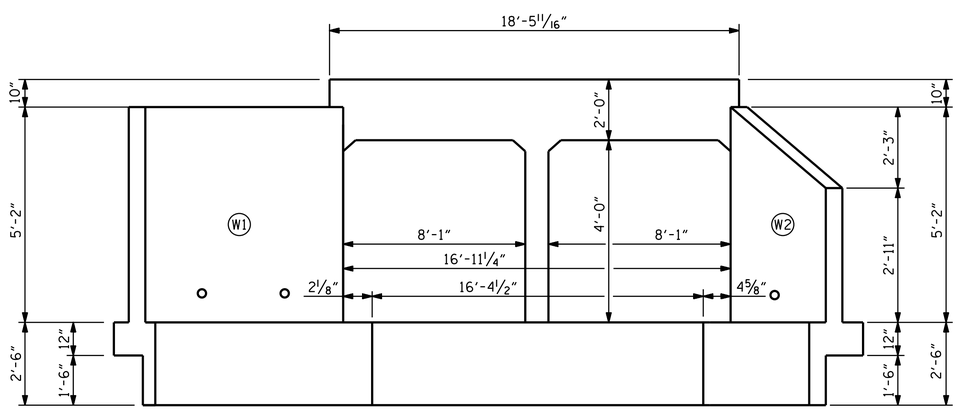

END ELEVATION NORMAL TO SKEW

(LOOKING UPSTREAM)

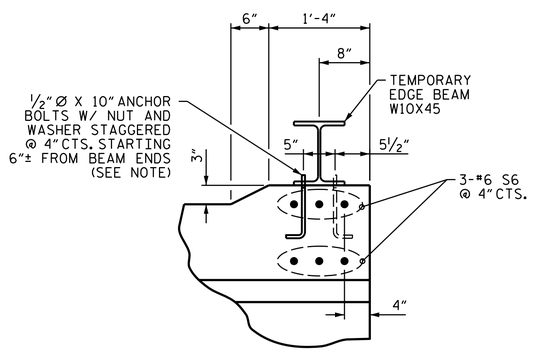

NOTE: AFTER STAGE 2 IS COMPLETE, THE BEAM SHALL BE REMOVED AND ANCHOR BOLTS CUT SMOOTH AND EPOXY APPLIED TO EXPOSED BOLTS TO PREVENT CORROSION.

DETAIL "A"

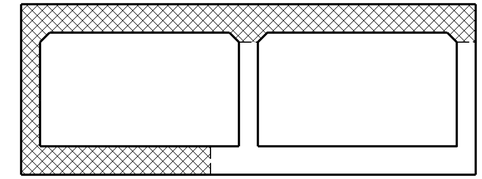

CONSTRUCTION PHASING - STAGE I

LOOKING UPSTREAM

PHASE I CONSTRUCTION

PHASE II CONSTRUCTION

PROJECT NO. 17BP.14.R.91

GRAHAM COUNTY

STATION: 13+27.15 -L-

I HEREBY CERTIFY THESE PLANS ARE THE AS-BUILT PLANS

WSP USA Inc.
434 FAYETTEVILLE STREET
SUITE 1500
RALEIGH, NC 27601
TEL: 1.919.836.4040
LICENSE NO. F-0165

SEAL NORTH CAROLINA PROFESSIONAL ENGINEER NICHOLAS A. PIERCE
9/7/2017

DOCUMENT NOT CONSIDERED FINAL UNLESS ALL SIGNATURES COMPLETED

STATE OF NORTH CAROLINA
DEPARTMENT OF TRANSPORTATION
RALEIGH

DOUBLE 7 FT.X 4 FT. CONCRETE BOX CULVERT STAGE I

REVISIONS						SHEET NO.
NO.	BY:	DATE:	NO.	BY:	DATE:	C-2
1			3			TOTAL SHEETS
2			4			13

DRAWN BY : M.J. OSTRISHKO DATE : 10/2014
CHECKED BY : N.A. PIERCE DATE : 11/2014

8/21/2017
R:\Raleigh Office NCDOT\17BP GROUP 1\17BP.14.R.91_370095\Structures\Drafting\410_002_17BP.14.R.91_SMU_CU02.dgn
usmo04281